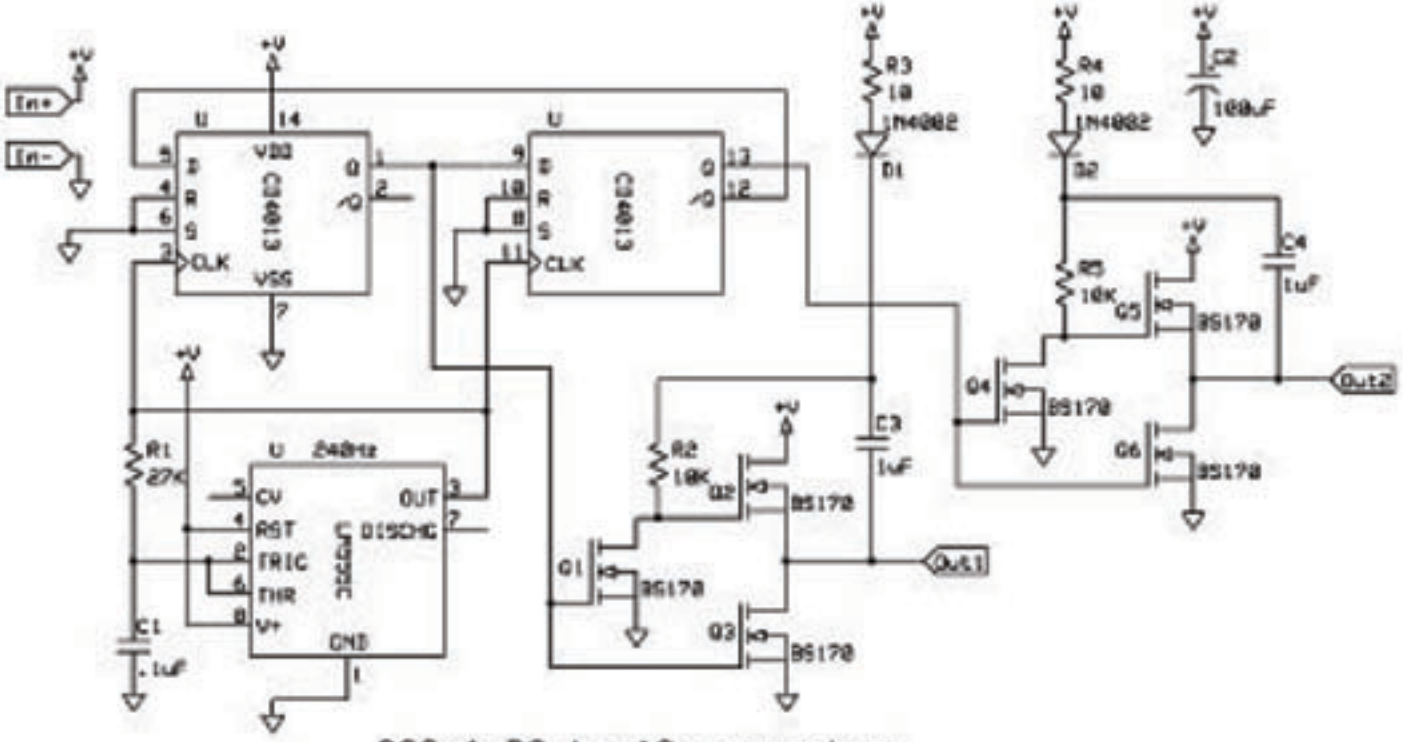

300mA DC to AC converter

Andrew Morris morr37630bellsouth.net