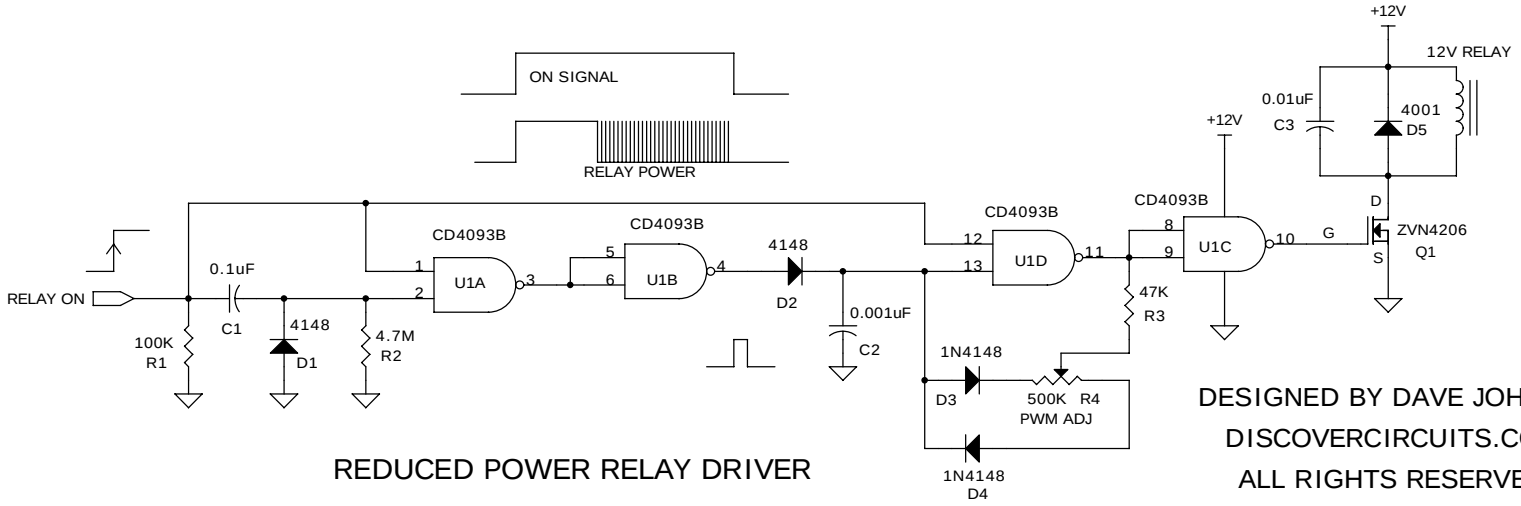

REDUCED POWER RELAY DRIVER

DESIGNED BY DAVE JOHNSON
DISCOVERCIRCUITS.COM
ALL RIGHTS RESERVED

DRAWN BY: DAVE JOHNSON

DAVID JOHNSON AND ASSOCIATES		
Title: REDUCED POWER RELAY DRIVER		
Size: B	Document Number: RELAYPWM.DSN	Rev: A
Date: Sunday, August 03, 2008	Sheet 1 of 1	