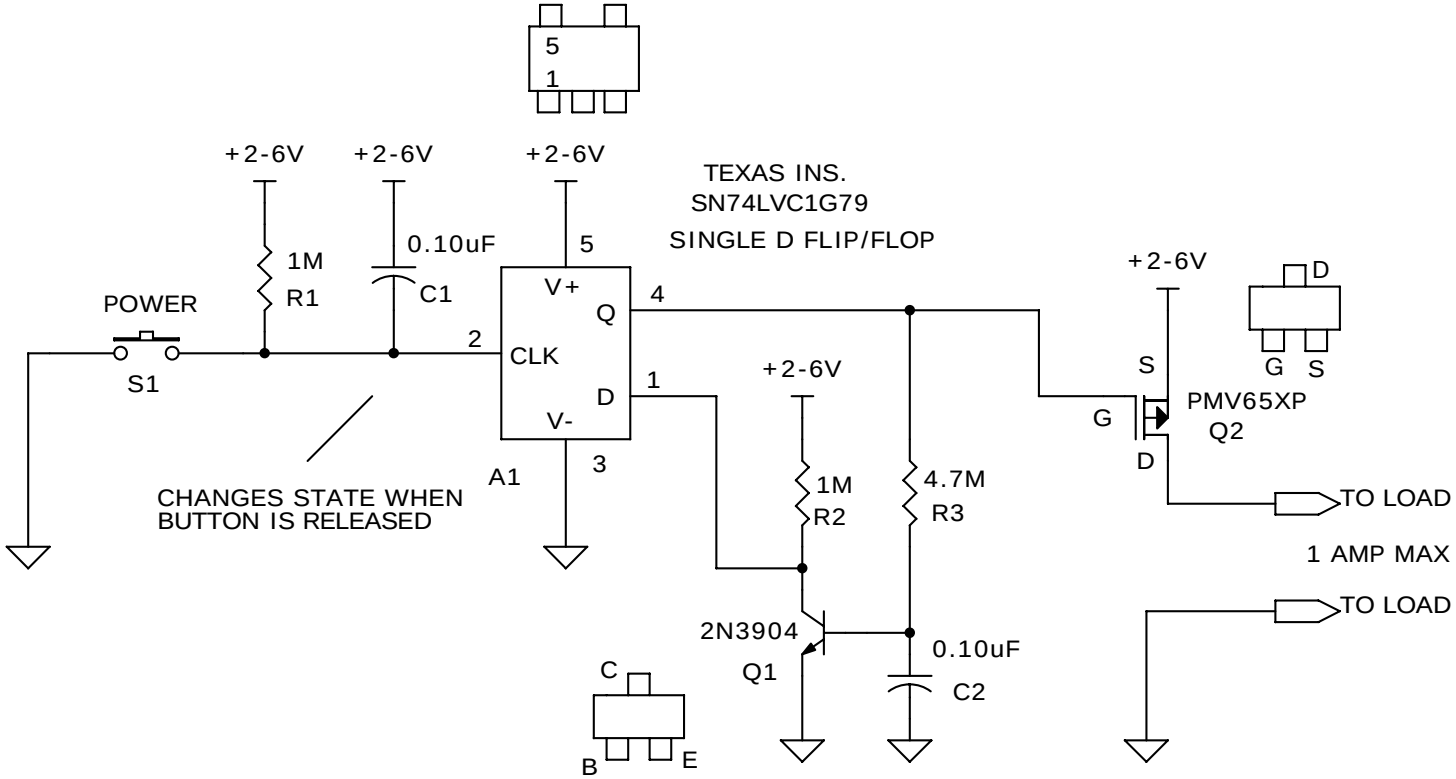

PUSH-ON, PUSH-OFF SWITCH CIRCUIT

DESIGNED BY DAVE JOHNSON

DISCOVERCIRCUITS.COM

ALL RIGHTS RESERVED

DRAWN BY: DAVE JOHNSON

Title	PUSHBUTTON ON/OFF SWITCH	
Size A	Document Number ON-OFF-FLIPFLOP1.DSN	Rev A
Date: Sunday, November 09, 2008	Sheet 1 of 1	