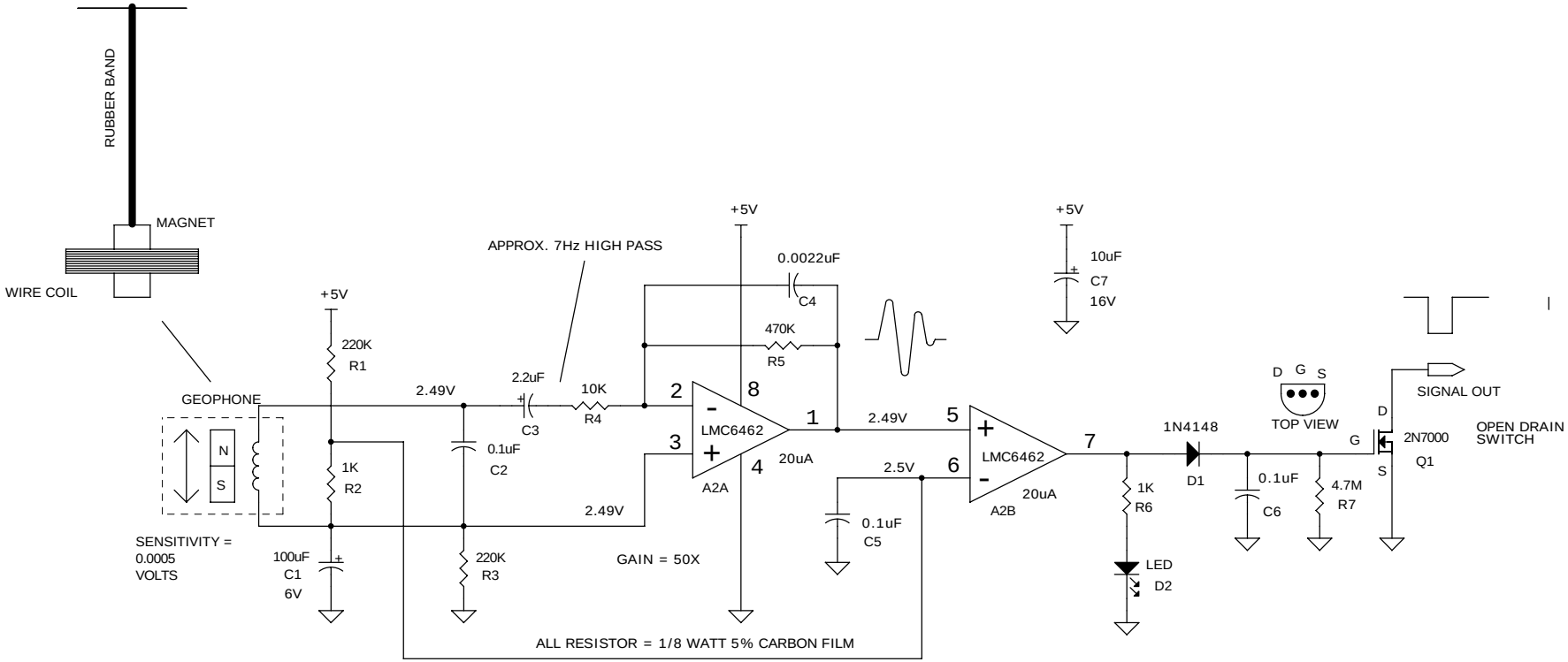

DESIGNED BY DAVE JOHNSON
DISCOVERCIRCUITS.COM
ALL RIGHTS RESERVED

GEOPHONE FOOT STOMP DETECTOR

DRAWN BY: DAVE JOHNSON

DAVID JOHNSON AND ASSOCIATES		
Title: GEOPHONE FOOT STOMP DETECTOR		
Size: B	Document Number: FOOTSTOPDET1.DSN	Rev: A
Date: Sunday, July 09, 2006	Sheet 1 of 1	