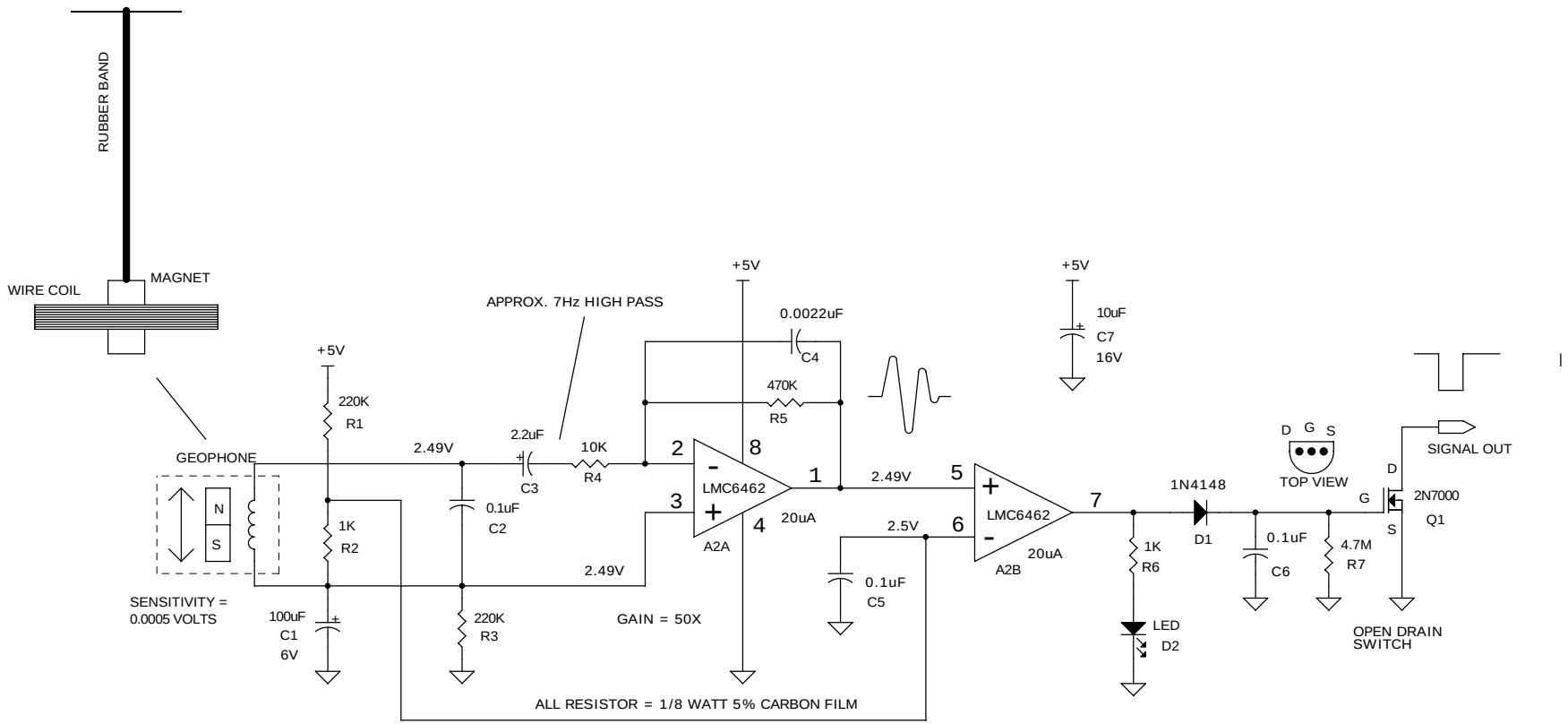


DRAWN BY: DAVE JOHNSON

# GEOPHONE FOOT STOMP DETECTOR

| | | |
|---|---|---|
| DAVID JOHNSON AND ASSOCIATES | | |
| Title: GEOPHONE FOOT STOMP DETECTOR | | |
| Size: B | Document Number: GEOPHONE3.DSN | Rev: A |
| Date: Friday, June 02, 2006 | Sheet 1 of 1 | |